A FRAMEWORK FOR A COLLABORATIVE DESIGN REVIEW SYSTEM UTILIZING *3D Game Development Tools*

Fairuz Shiratuddin
Walid Thabet
Department of Building Construction
Virginia Tech, USA

CIB W78 2003
20th International Conference on Information Technology for Construction
Waiheke Island, Auckland, New Zealand, April 23-25

Design Reviews

A process required during pre-construction phase of a project as a means to detect and identify errors and inconsistencies in designs.

- Minimize/eliminate potential problems that may be encountered during the construction and operation of a facility.

- The characteristics of many projects suggest that design reviews are necessary for ensuring as balance among the various conflicting requirements of many projects *(O'Conner)*

Design Reviews - *Components*

Major aspects to be considered during a design review include: *(W. East and M. Fu)*

- Biddability reviews
- Constructability reviews
- Operability reviews
- Customer reviews
- Other reviews

Design Reviews - *Process*

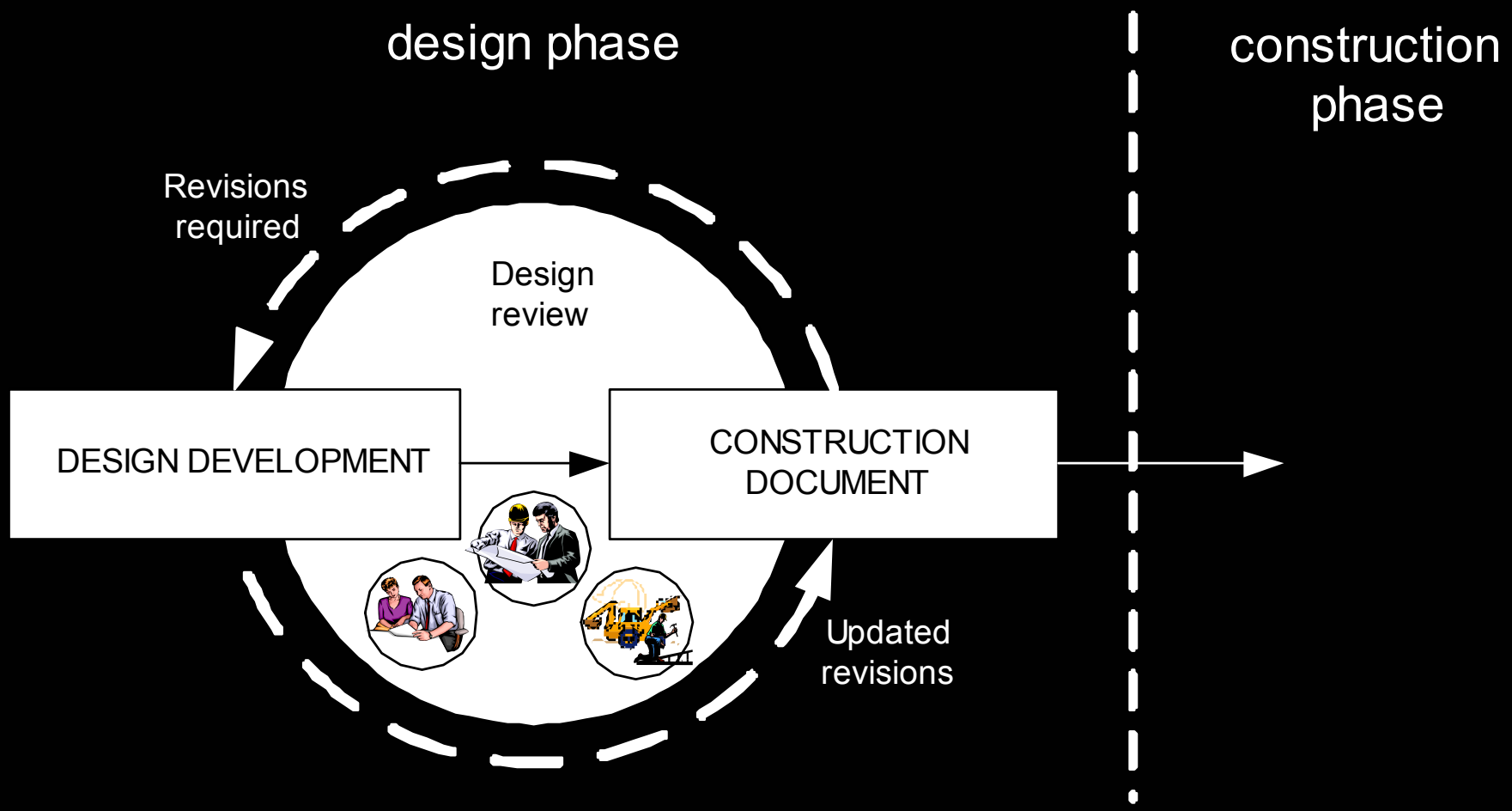

- Iterative process
- Collaboration of a several review team
- Access to large amount of information

Design Reviews - *Challenges*

- Coordinating 2D design drawings, specifications and other sources of information is cumbersome
- Retrieval of paper-based “lessons learned” lists is problematic
- Collaboration/interaction of review team members
- Re-design and then re-review

✓ ***Resource intensive***

✓ ***Time intensive***

Design Reviews – *VR applications*

- Many implementations provide passive walkthroughs of the facility for design review

- New advancement in 3D modeling tools

Design Reviews – *New VR applications*

In addition to passive 3D visualization/walkthroughs, new research efforts focus on

- ✓ Handling product attribute values/information *(retrieving, reviewing, and storing)*
- ✓ Facilitating interaction/collaboration between design review participants through virtual meetings that capture comments and reviews
- ✓ Provide autonomous or semiautonomous agents capable of performing parts of the design review
- ★ ✓ Allow for real-time manipulation and modifications of the design elements

Design Reviews – *Example efforts*

- ✓ VR-based design review system of mechanical products

  K. Kremer, University of Paderborn, Germany

- ✓ The Virtual Design Review (web-based system)

  M. Fu, U. of Illinois at Urbana Champain, and W. East, US Army CERL, USA

- ✓ Design Critique inside a Multi-Player Game Engine

  J. Moloney, R. Amor, J. Furness, B. Moores, University of Auckland, New Zealand

Research Focus

Develop a framework for a collaborative design review model using GDK

- *Identify needs for a collaborative virtual design review model*
- *Develop a framework for a collaborative design review model*
- *Test one or more game engines and identify current limitations*

Proposed Framework

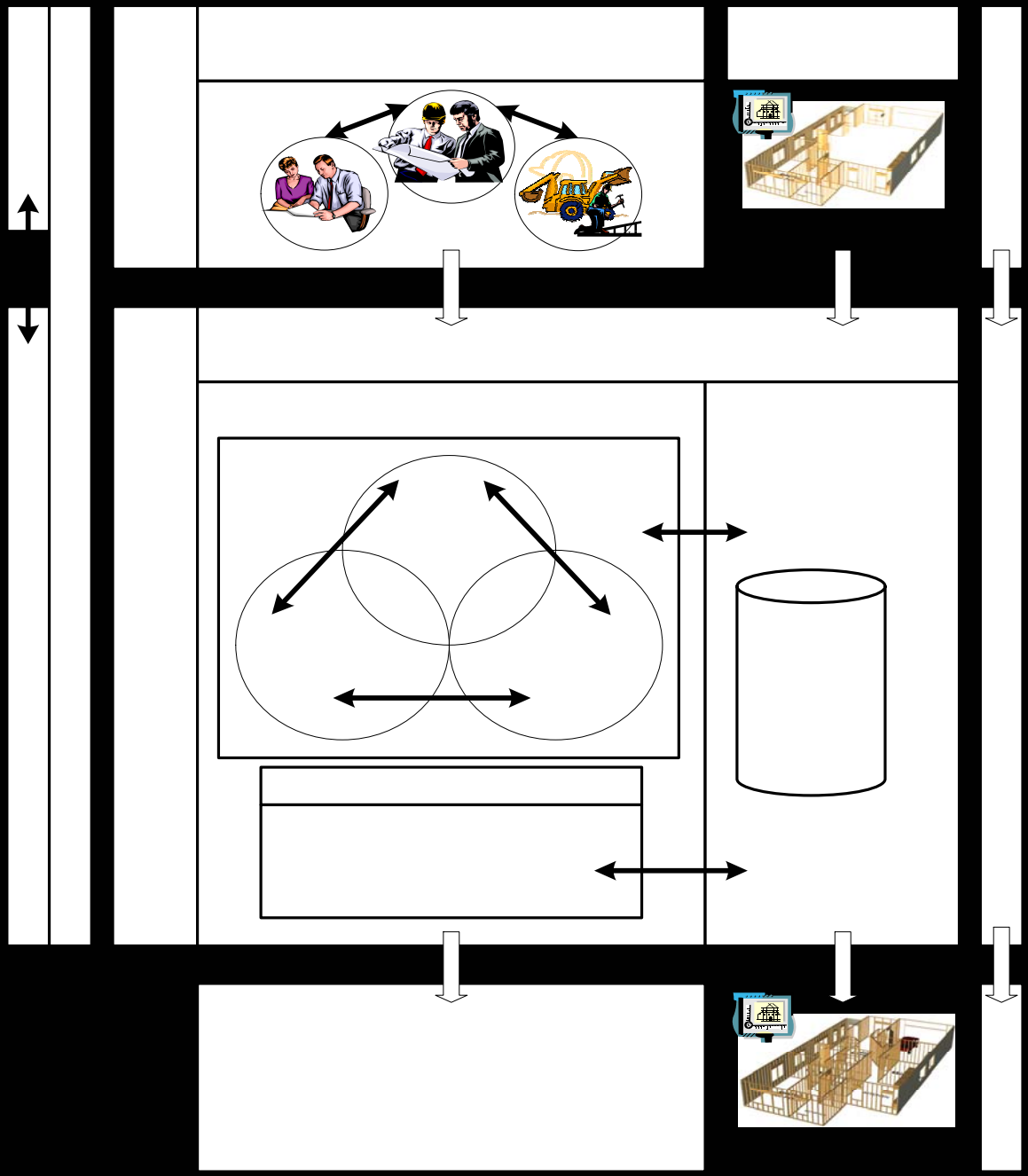

Design Modification Module

- Real-time editing
- Design Annotations and Comments (Red-lining)
- Virtual Ruler

Example Object Manipulation Flow Chart

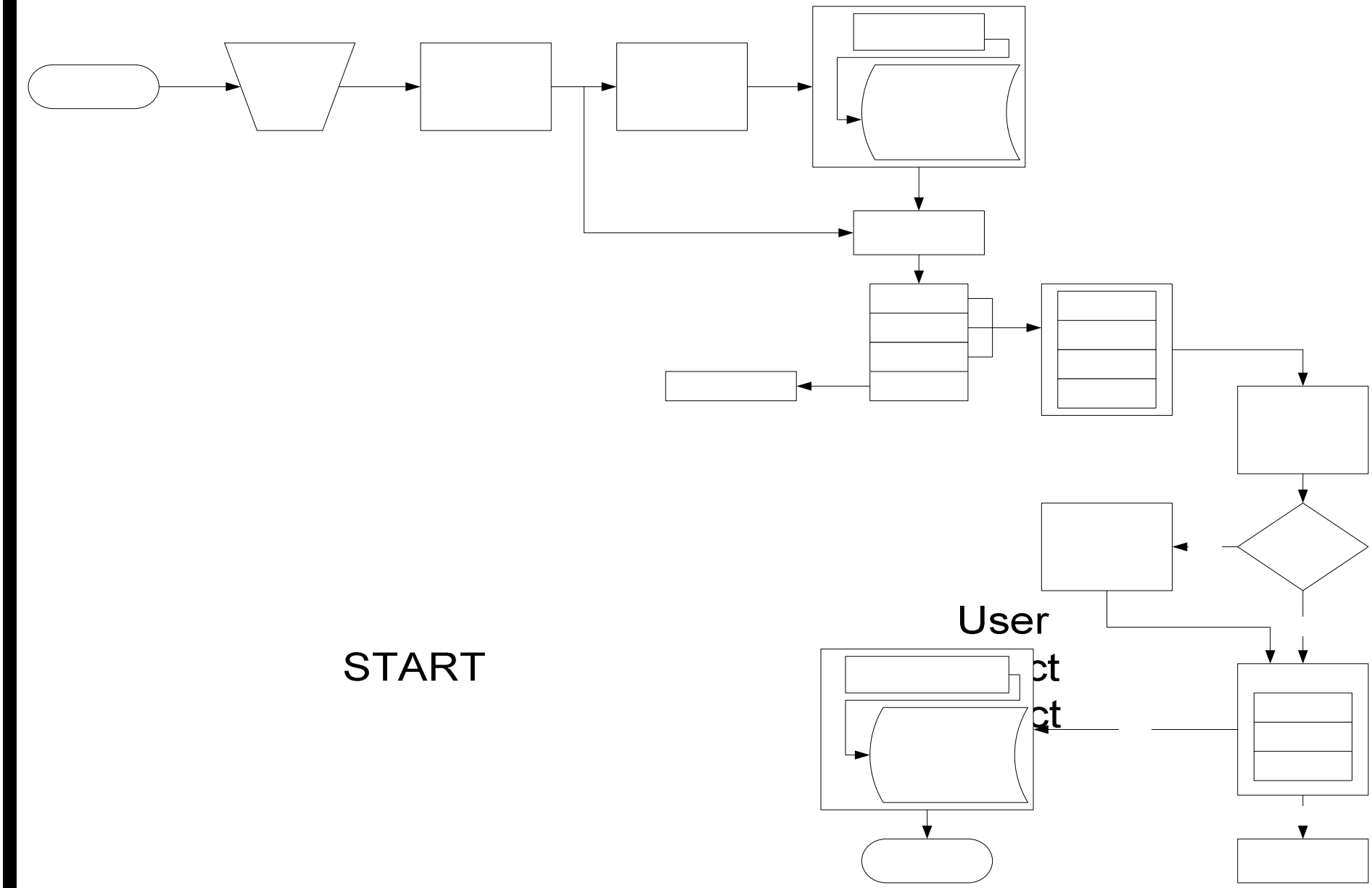

Collaboration Module

- Will be based on Client-Server network architecture

- Comprise of several sub-modules
  - *Text chatting and logging module*
  - *Voice Over Internet Protocol (VOIP) communication module*
  - *2D Heads-Up-Display (HUD) module*

- We have investigated the networking capability of the UT 3D Game Engine

Information Manipulation Module

- Have all the pertinent information embedded within objects present in the VE such as:
  - cost (materials, labor, equipment, overhead and profit etc.)
  - material (type, strength, stress and strain etc.)
  - building codes

- The information will be filtered accordingly and intelligently to reflect participants' background and requirement

- Include Intelligent Checklist

Role of 3D Game Engines (3DGE) as a VR Development Tool

- ✓ Many (more than 600+) are available at very minimal cost or even FREE. Some commercial engines are highly priced.
- ✓ Many come with complete development tool (e.g. level editor and programming language compilers, APIs, and the 3D Engine itself).
- ✓ Simplify the process of importing/creating 3D world
- ✓ Support the very latest 3D graphics software and hardware technology
- ✓ Many can run on average IBM-PCs…hence high costs associated with high-end hardware is no longer required.

3D Games Development Tools Investigated

Two 3D Game Engines are being investigated

- *Unreal Tournament*
- *3DState (formerly known as Morfit)*

Unreal 3DGE found to be not suitable due to limited availability and access to source codes and APIs

- *Uses proprietary programming language i.e. UnrealScript*
- *Though unofficial documentation is widely available through online community, still not enough to support the proposed application development*

Current development has shifted to 3DState due to availability of full source code and APIs, affordably priced

- *APIs can be interfaced with commonly used language i.e. Visual C++, Visual Basic, Delphi and Euphoria*
- *Available function libraries thru 3DState*
- *Availability of documentation*
- *Better extensibility* in the long-run

Unreal vs 3DState

	Unreal Engine	3DState
Licensing (non-commercial & educational)	Free (partial SDK released). Engine comes with the purchased game	V5 and above = $49 (Student License). Full SDK. Older versions are FREE (Full SDK).
Commercial License	$350,000 + royalty (includes full SDK)	$399 + no royalty
Visual Fidelity	High quality	Average
Programming Language	UnrealScript (proprietary)	Depending on the choice of SDK used, 3DState APIs can be embedded within Visual Basic, Visual C++, Delphi and Euphoria development environment
Extensibility	Without the full access to the source code, development is limited to parent class function extension and modification only	Combination of 3DState APIs, Other APIs and of the supported programming language….provides better extensibility
Level editor	UnrealEd (more advanced)	3DWebmaker (provides basic functionality)
Stereoscopic display	Yes	Yes
Desktop computer support	Yes	Yes

Prototype Implementation – Case Study

Prototype Implementation

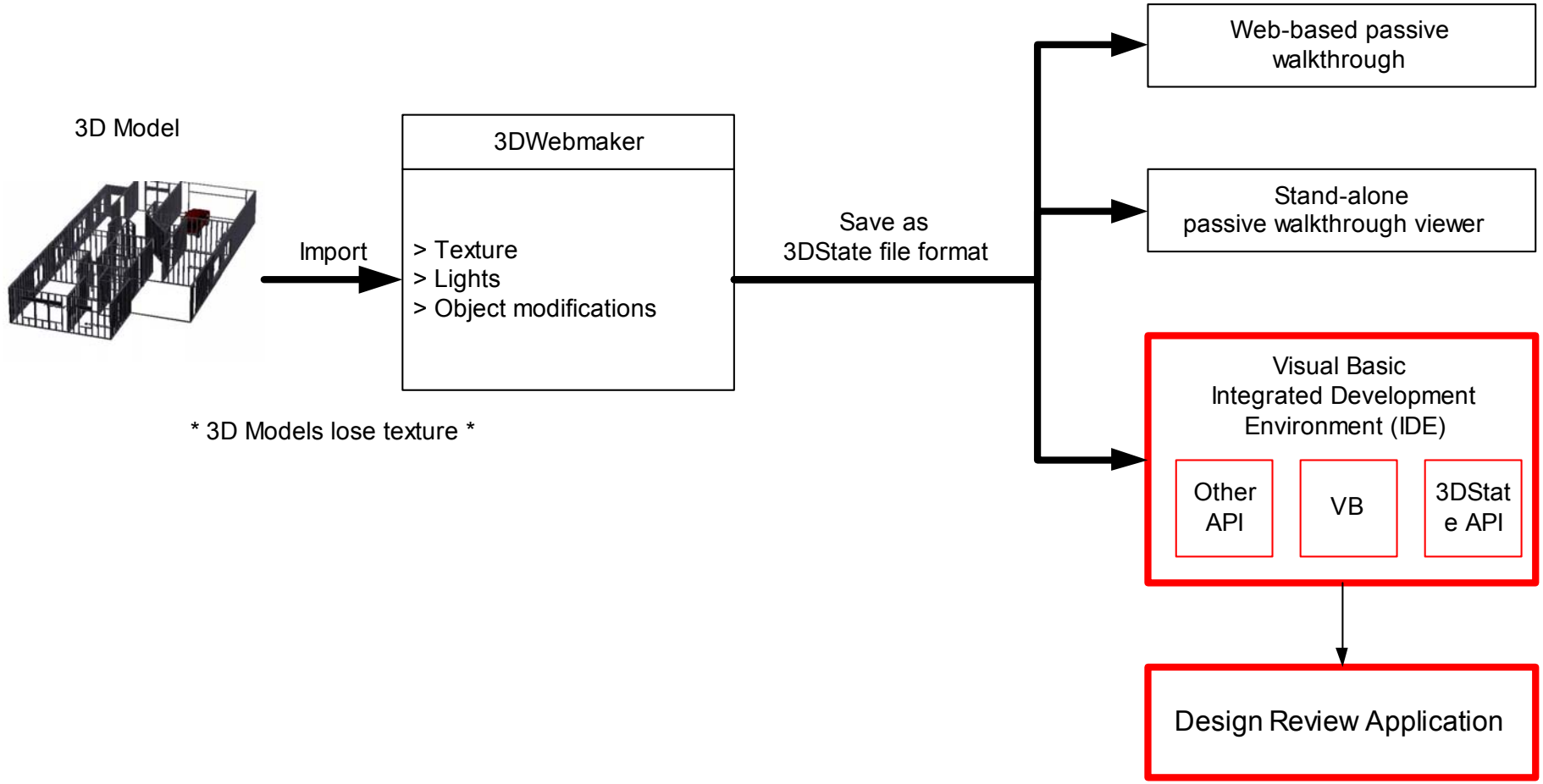

Conclusion

- Design review process is crucial and will benefit greatly from VR
- VR implementation efforts need to look past 3D modeling and passive walkthroughs and explore the more powerful potentials of the technology
- Collaborative research is really needed in this area

CONVR 2003

Conference On Construction Applications of Virtual Reality

September 25-27, 2003

Virginia Tech, Blacksburg, VA, USA

For Information: **http://bc.arch.vt.edu/CONVR2003**

Thank You

Walid Thabet